WHITEHAUS® COLLECTION
A Collection of Fine Products
whitehauscollection.com

VINTAGE III / WHKSDTCRV3-8104

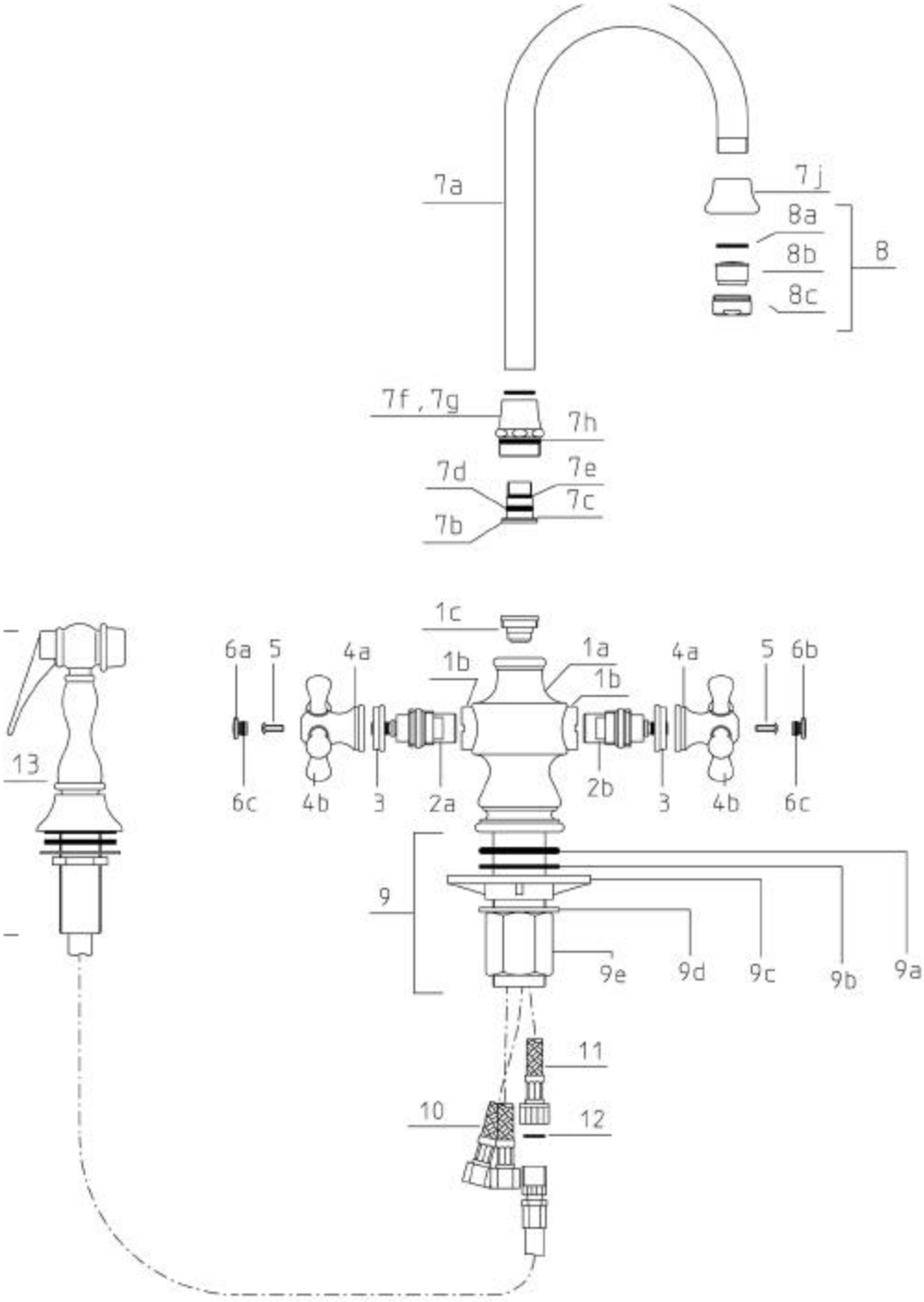

LIVE WITH STYLE!

589 Boston Post Rd - West Haven, CT 06516 USA - Tel: 203.479.8466 - Fax: 203.479.8477
E-mail: info@whitehauscollection.com - Toll Free Tel: 800.527.6690 - Toll Free Fax: 800.694.4837